ZHIGUANG

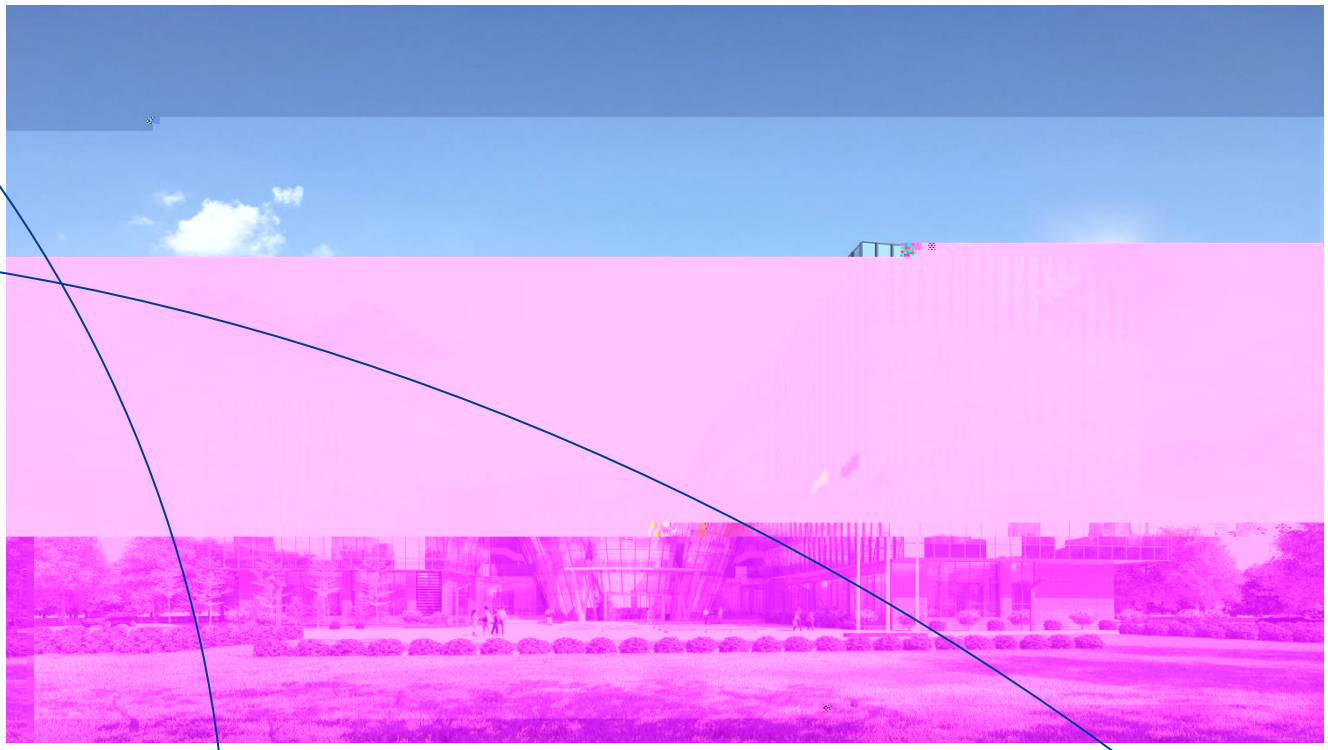

Guangzhou Zhiguang Electric Co., Ltd.

Jan. 2025

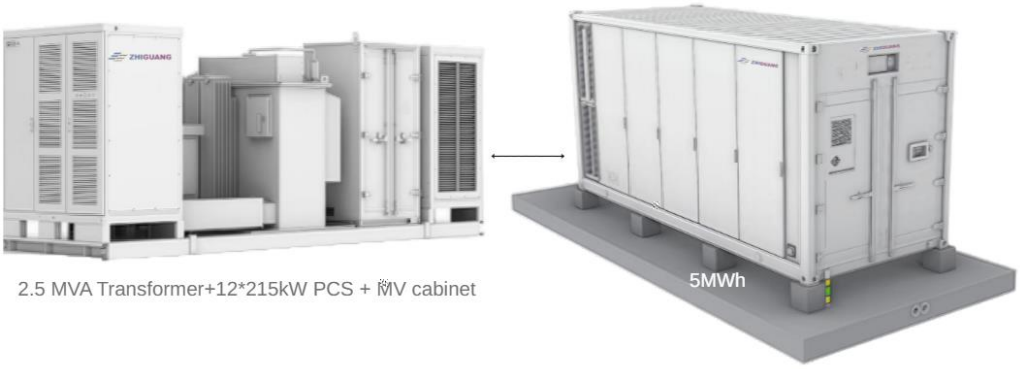

PCS + Boosting System **Battery System**

-

ZHIGUANG

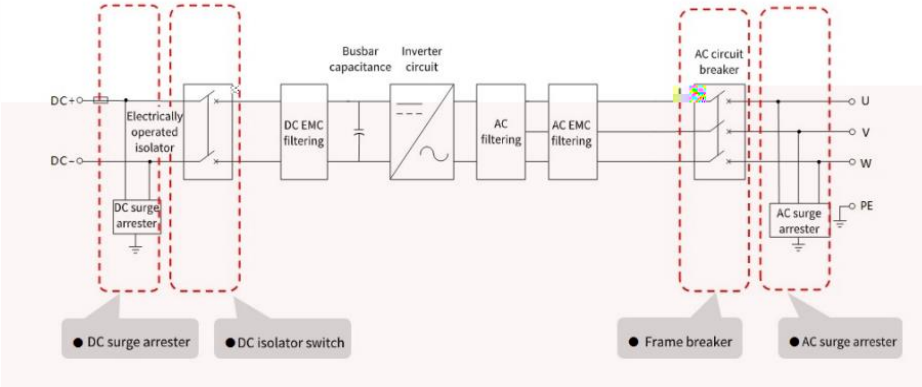
DC+
DC-
Electrically operated isolator
DC surge arrester
DC EMC filtering
Busbar capacitance
Inverter circuit
AC filtering
AC EMC filtering
AC circuit breaker
U
V
W
PE
AC surge arrester
DC surge arrester
DC isolator switch
Frame breaker
AC surge arrester

	（＞ ）
	＜

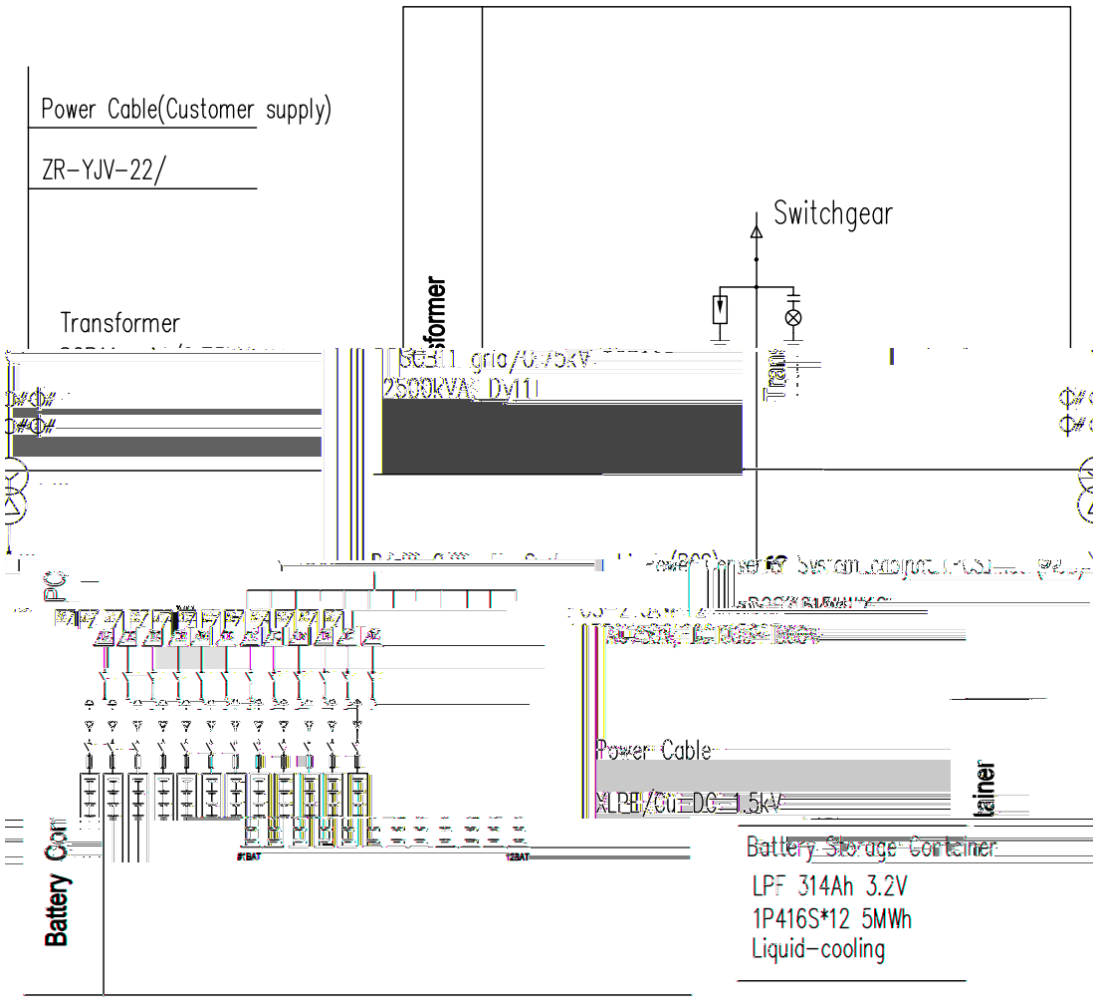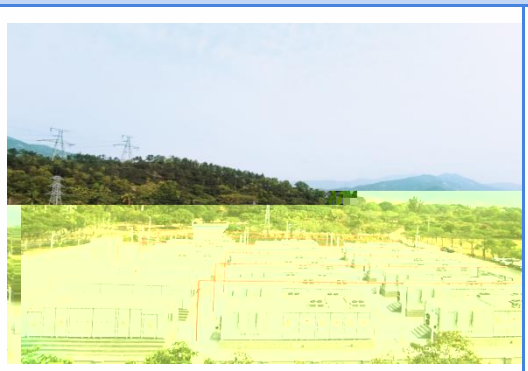
Power Cable(Customer supply)
ZR-YJV-22/
Transformer
Switchgear
Power Cable
Battery Storage Container
LPF 314Ah 3.2V
1P416S*12 5MWh
Liquid-cooling